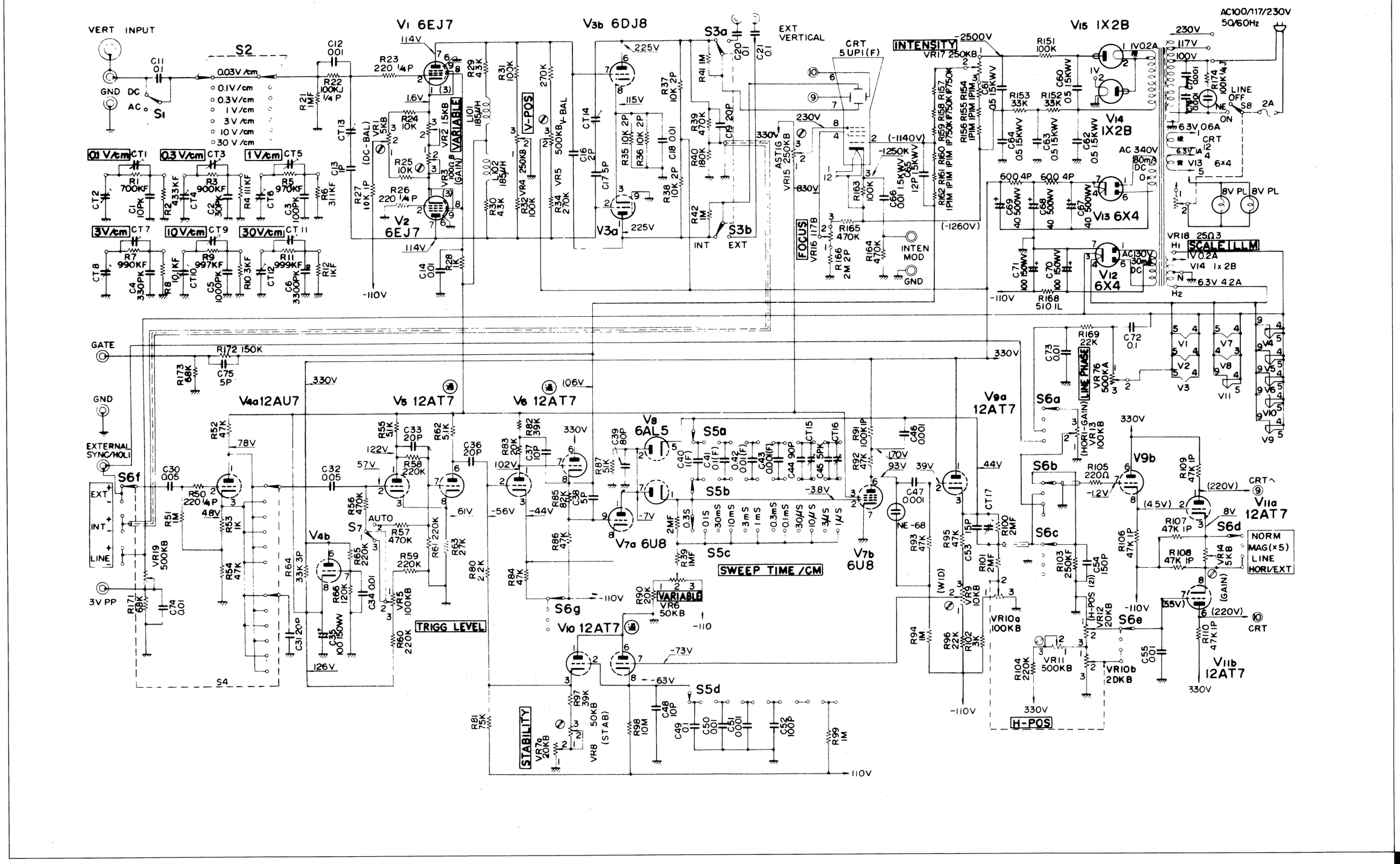
VERT INPUT
GND
DC
AC
S1
S2
0.03V/cm
0.1V/cm
0.3V/cm
1V/cm
3V/cm
10V/cm
30V/cm
V1 6EJ7
V2 6EJ7
V3a
V3b 6DJ8
S3a
S3b
EXT VERTICAL
CRT 5UP1(F)
INTENSITY
FOCUS
INTEN MOD
GND
V15 1X2B
V14 1X2B
V13 6X4
V12 6X4
AC100/117/230V 50/60Hz
LINE OFF
S8
2A
CRT
8V PL
SCALE ILLM
GATE
GND
EXTERNAL SYNC/HOLI
S6f
EXT
INT
LINE
3V PP
V4a 12AU7
V5 12AT7
V6 12AT7
V8 6AL5
V7a 6U8
V7b 6U8
V9a 12AT7
V9b
V11a 12AT7
V11b 12AT7
V4b
V10 12AT7
S4
S5a
S5b
S5c
S5d
S6a
S6b
S6c
S6d
S6e
S6g
S7
AUTO
TRIGG LEVEL
SWEEP TIME/CM
VARIABLE
STABILITY
LINE PHASE
H-POS
NORM MAG(x5) LINE HORI/EXT
CRT